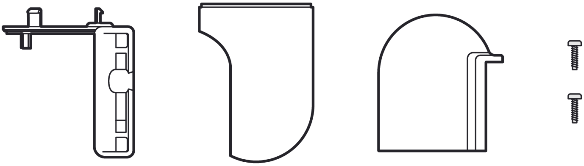

✓

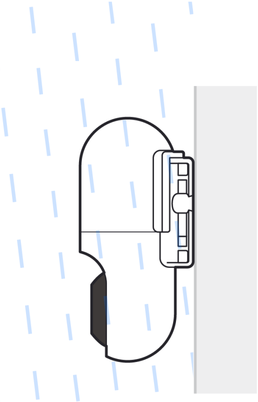

✗

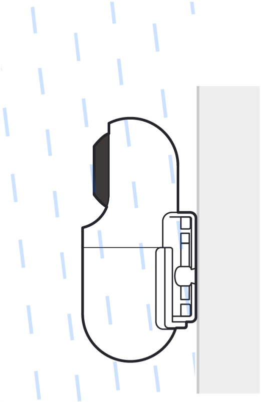

✓

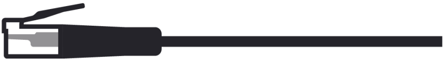

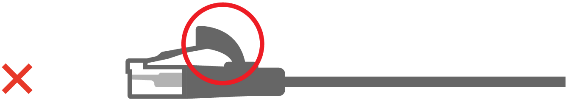

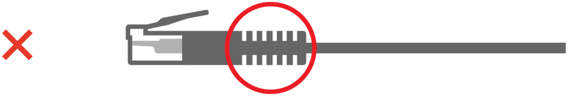

Ⓐ

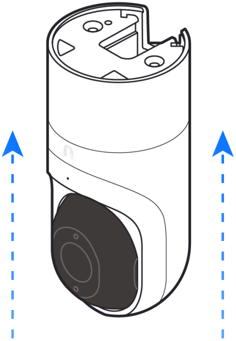

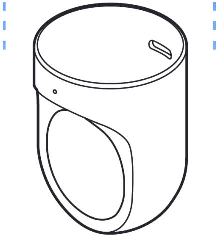

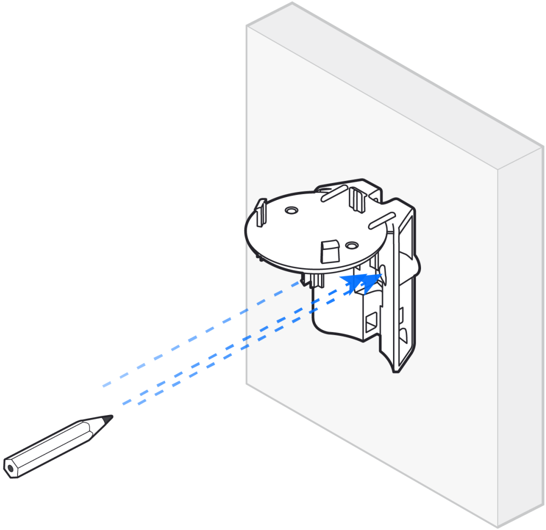

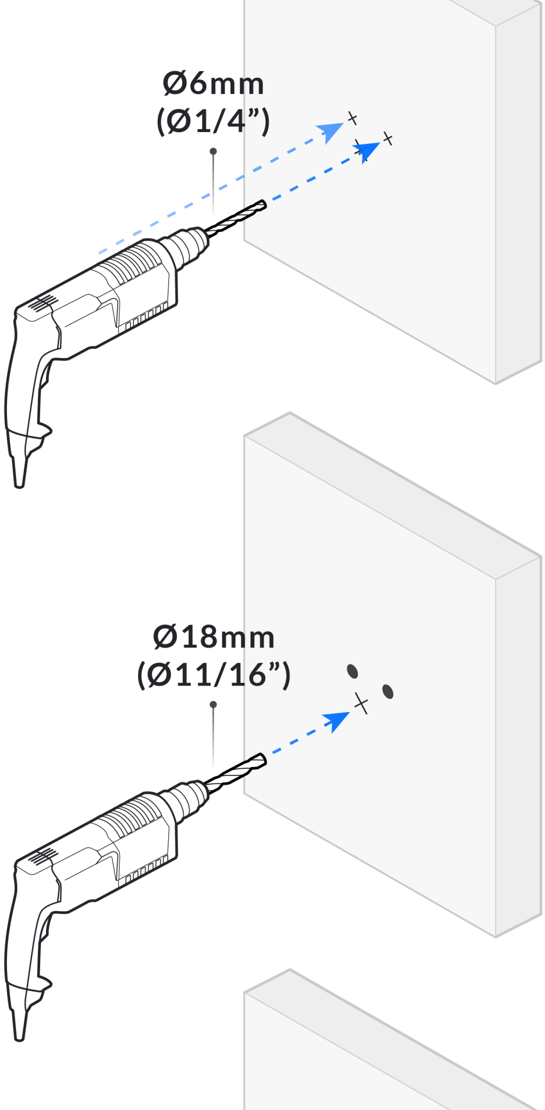
Ø6mm
(Ø1/4”)
Ø18mm
(Ø11/16”)

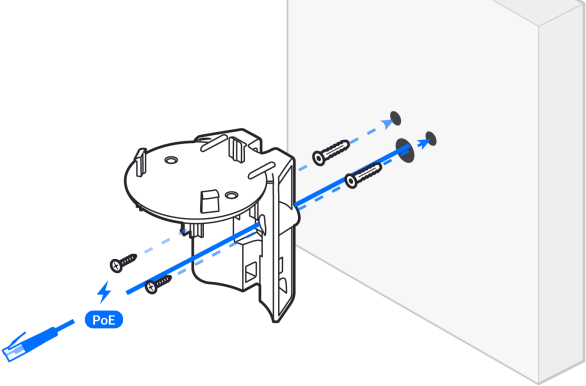

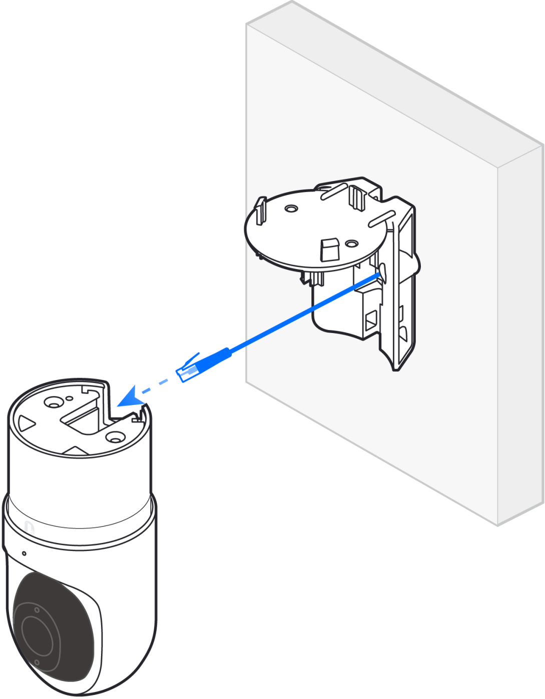

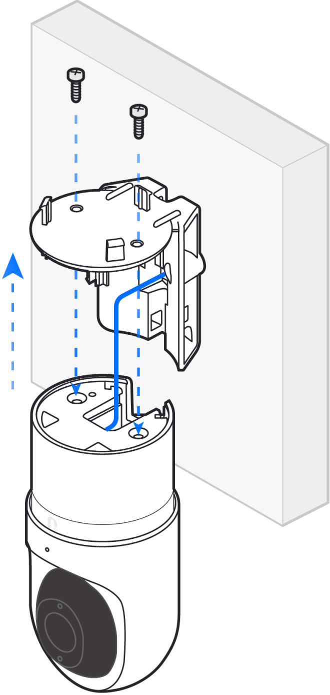

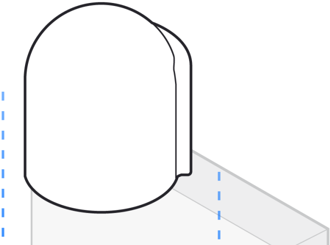

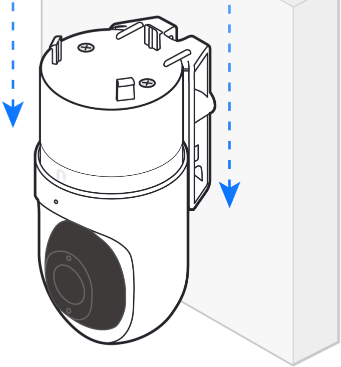

B

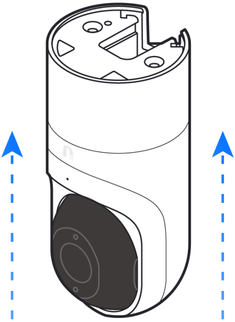

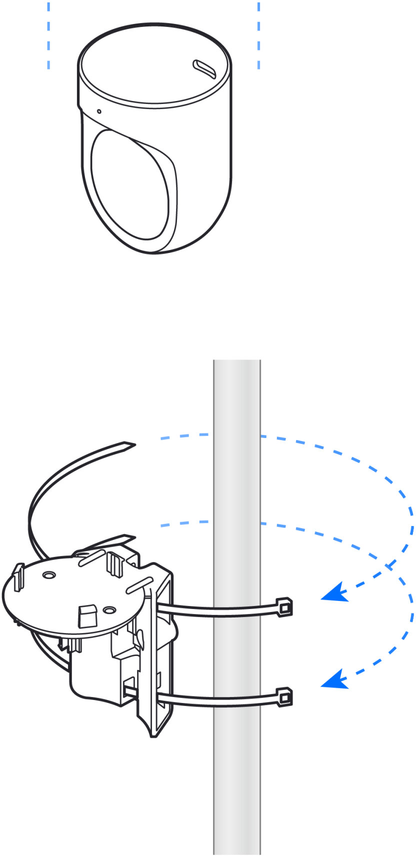

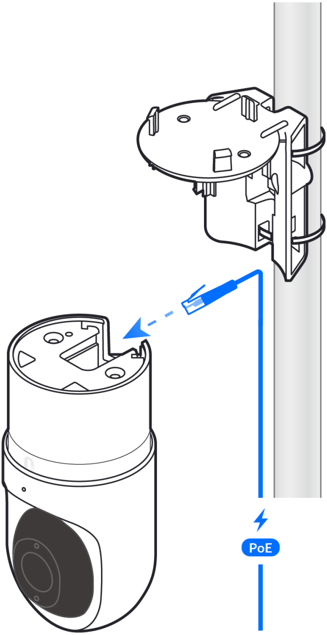

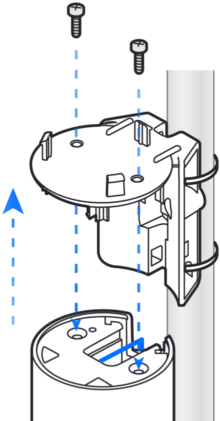

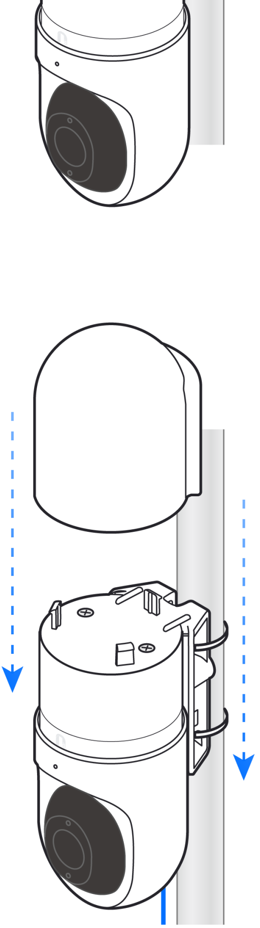

UniFi® Protect

G3 Flex PWM

Get Answers
community.ui.com